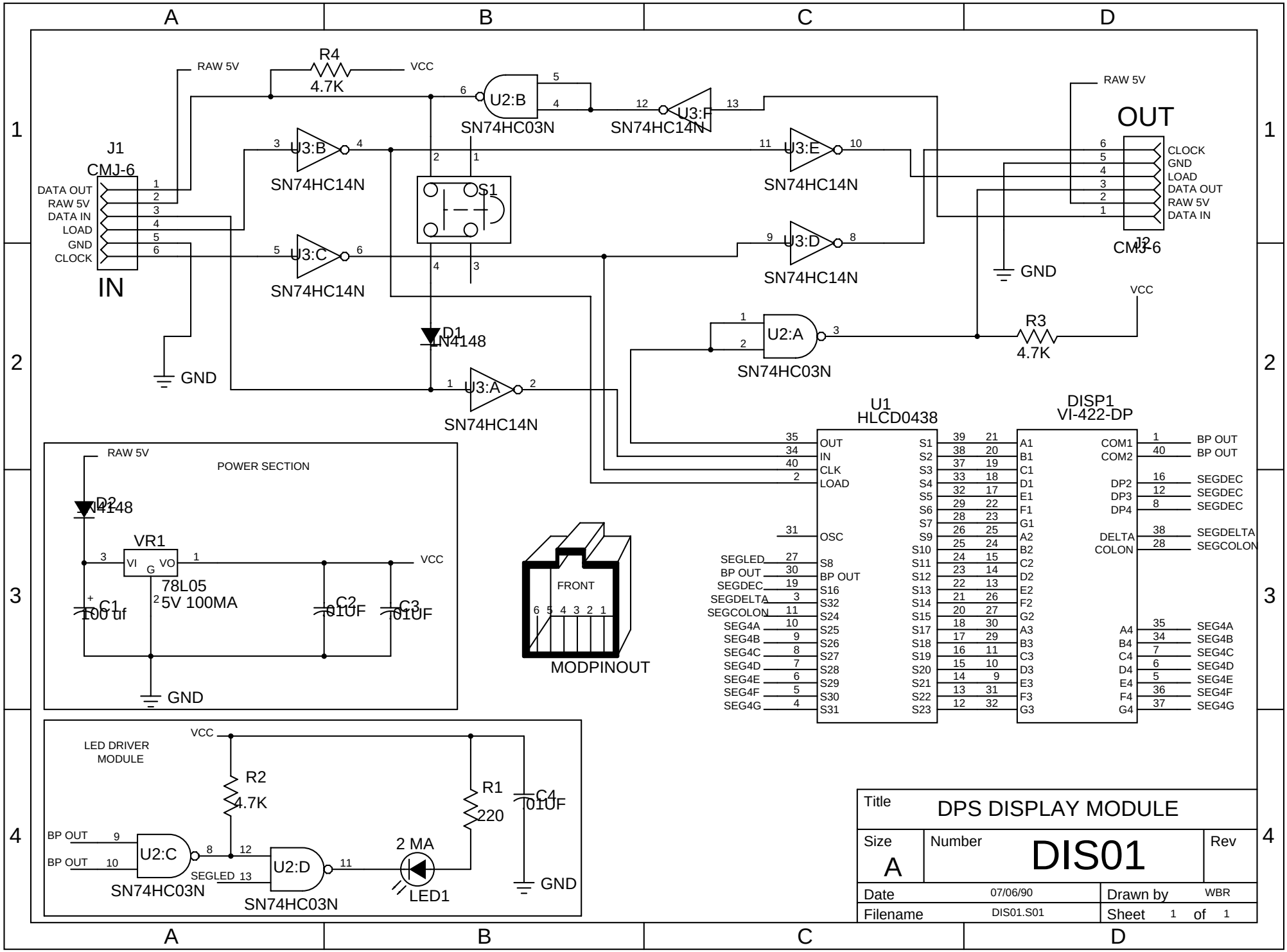
J1
CMJ-6
IN
DATA OUT
RAW 5V
DATA IN
LOAD
GND
CLOCK
RAW 5V
R4
4.7K
VCC
U2:B
SN74HC03N
U3:F
SN74HC14N
U3:B
SN74HC14N
U3:C
SN74HC14N
S1
U3:E
SN74HC14N
U3:D
SN74HC14N
D1
1N4148
U3:A
SN74HC14N
U2:A
SN74HC03N
R3
4.7K
OUT
J2
CMJ-6
CLOCK
GND
LOAD
DATA OUT
RAW 5V
DATA IN
POWER SECTION
D2
1N4148
VR1
78L05
5V 100MA
C1
100 uf
C2
01UF
C3
01UF
U1
HLCD0438
DISP1
VI-422-DP
MODPINOUT
FRONT
LED DRIVER
MODULE
R2
4.7K
R1
220
C4
01UF
U2:C
U2:D
SN74HC03N
2 MA
LED1
Title
DPS DISPLAY MODULE
Size
A
Number
DIS01
Rev
Date
07/06/90
Drawn by
WBR
Filename
DIS01.S01
Sheet 1 of 1