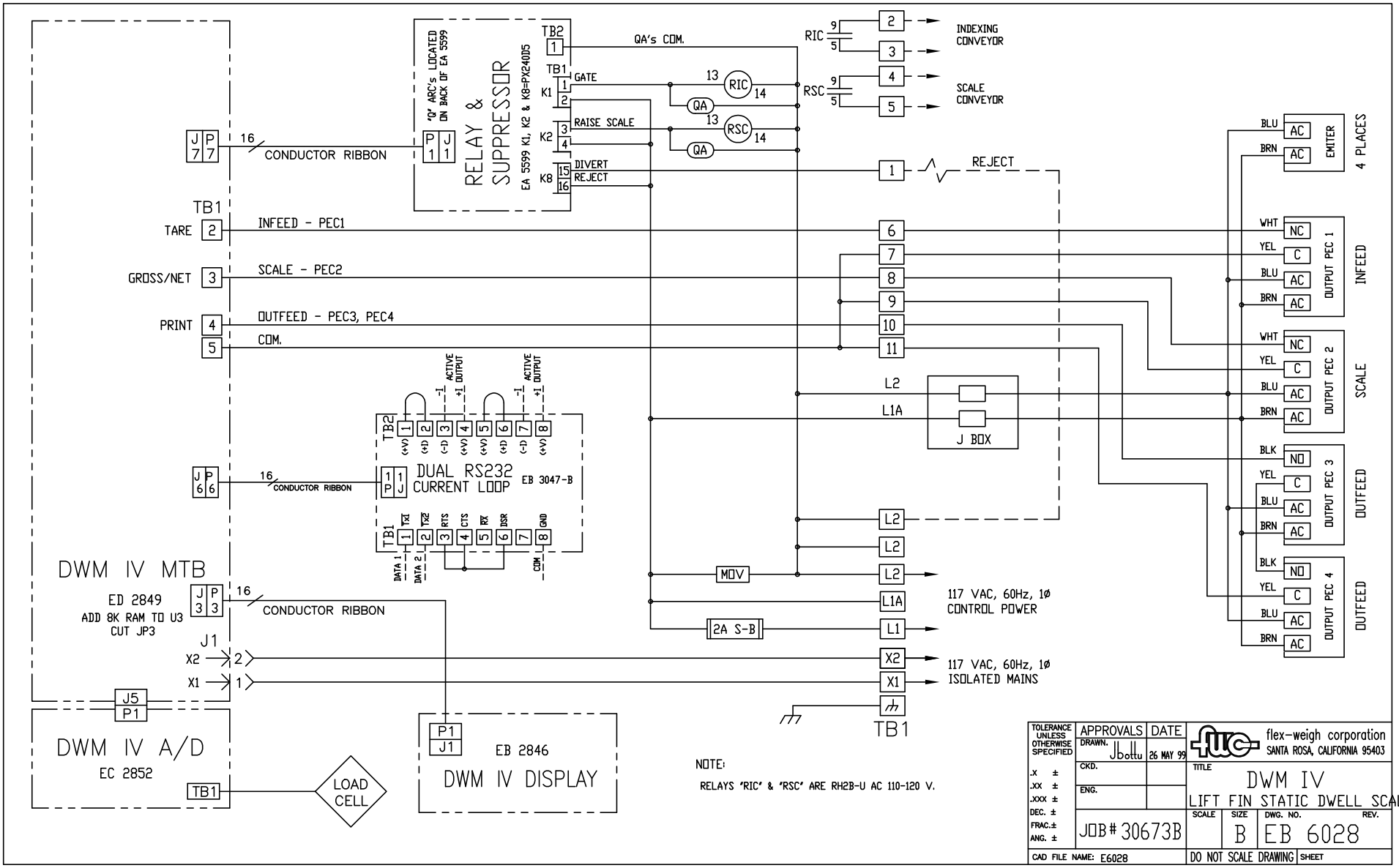
DWM IV MTB
ED 2849
ADD 8K RAM TO U3
CUT JP3
J3 P3
16
CONDUCTOR RIBBON
J1
X2
X1
J5
P1
DWM IV A/D
EC 2852
TB1
LOAD CELL
J7 P7
16
CONDUCTOR RIBBON
TB1
TARE 2
INFEED - PEC1
GROSS/NET 3
SCALE - PEC2
PRINT 4
OUTFEED - PEC3, PEC4
5
COM.
"Q" ARC's LOCATED ON BACK OF EA 5599
P1 J1
RELAY & SUPPRESSOR
EA 5599 K1, K2 & K8=PX240D5
TB2
1
QA's COM.
TB1
GATE
K1
RAISE SCALE
K2
DIVERT
REJECT
K8
13
RIC
14
QA
RSC
RIC 9 5
RSC 9 5
2
INDEXING CONVEYOR
3
4
SCALE CONVEYOR
5
1
REJECT
6
7
8
9
10
11
L2
L1A
J BOX
L2
L2
L2
MOV
L1A
2A S-B
L1
X2
X1
117 VAC, 60Hz, 1Ø
CONTROL POWER
117 VAC, 60Hz, 1Ø
ISOLATED MAINS
TB1
J6 P6
16
CONDUCTOR RIBBON
TB2
ACTIVE OUTPUT
-I +I
(+V) (+I) (-I) (+V) (+V) (+I) (-I) (+V)
DUAL RS232
CURRENT LOOP
EB 3047-B
TB1
TX1 TX2 RTS CTS RX DSR GND
DATA 1
DATA 2
COM
P1 J1
EB 2846
DWM IV DISPLAY
NOTE:
RELAYS "RIC" & "RSC" ARE RH2B-U AC 110-120 V.
BLU AC
BRN AC
EMITER
4 PLACES
WHT NC
YEL C
BLU AC
BRN AC
OUTPUT PEC 1
INFEED
WHT NC
YEL C
BLU AC
BRN AC
OUTPUT PEC 2
SCALE
BLK NO
YEL C
BLU AC
BRN AC
OUTPUT PEC 3
OUTFEED
BLK NO
YEL C
BLU AC
BRN AC
OUTPUT PEC 4
OUTFEED
TOLERANCE UNLESS OTHERWISE SPECIFIED
.X ±
.XX ±
.XXX ±
DEC. ±
FRAC.±
ANG. ±
APPROVALS
DATE
DRAWN. JBottu 26 MAY 99
CKD.
ENG.
JOB# 30673B
CAD FILE NAME: E6028
flex-weigh corporation
SANTA ROSA, CALIFORNIA 95403
TITLE
DWM IV
LIFT FIN STATIC DWELL SCALE
SCALE
SIZE B
DWG. NO. EB 6028
REV.
DO NOT SCALE DRAWING
SHEET